International Journal of Latest Research in Humanities and Social Science (IJLRHSS)
Volume 04 - Issue 09, 2021
www.ijlrhss.com || PP. 50-55

Analysis of the Last Planner System (LPS) and Least Cost Analysis (LCA) Methods on Time and Cost Performance in High-rise Residential Building Projects

Stefanus Willem Kastanja[1,a)], Mawardi Amin[1,b)] andSyafwandi[1,c)]
[1] *MercuBuana University, Jakarta, Indonesia*
Corresponding author :[a)]stefanuswillemkastanya@gmail.com
[b)]mawardi@mercubuanal.ac.id
[c)]Syafwandi@mercubuanal.ac.id

Abstract: Building construction is made by planning at the beginning of the project plan so that at that time, the building owner determines the type of building and the desired benefits. In the implementation of construction projects, the project duration is often accelerated due to certain conditions; for example, the project owner may want the project to be completed earlier than the original plan, or the owner will give a bonus if the project is completed earlier than planned. Herman Gregory Ballard, in his 2000 dissertation entitled The Last Planner System of Production Control**.** This research aims to find out whether LPS can increase the reliability of work plans with PPC above 70.00%. The study was conducted on several construction projects. This study concluded that LPS could increase planning reliability above 70.00%. Construction of the world in Indonesia today is faced with very complex projects and a short period and is expected to maximize the function of the schedule on time, minimum cost, and high-quality goods. To meet these challenges required a method to enhance the efficiency and effectiveness in increasing competitiveness in the competitive construction industry market. This study aims to determine and examine (a) How the understanding of project workers is related to the implementation of the method Last Planner System (LPS)**,** Least Cost Analysis (LCA)**,** and process control in high-rise residential building projects?; (b) How to apply Least Cost Analysis (LCA) to high-rise residential building projects resulting in project completion on time and cost according to the schedule and budget?; (c) How does the analysis of the LPS & LCA method affect the control process in the completion of high-rise residential building projects?; and (d) Can the method LPS & LCA work well in synergy or can it become an obstacle to each other in the control process in the completion of high-rise residential building projects?The research findings are (a) understanding of project workers related to the implementation of the method Last Planner System (LPS), Least Cost Analysis (LCA). Furthermore, control process in high-rise residential building projects, categorized as adequate, even close to good; (b) Implementation of Least Cost Analysis (LCA) on high-rise residential building projects resulted in project completion with a completion time of 109 weeks, and with an accelerated time it could be shortened to 102 weeks; (c) The understanding of project workers about LPS, and LCA, partially has a significant positive effect on understanding the importance of process control in every job in the project; and (d) There is a synergistic effect of project workers' understanding of LPS and LCA which can increase understanding of the importance of process control for each job in the project.

Keywords:LPS, LCA, and Project Control Process

Introduction

Building construction is made by planning at the beginning of the project plan so that at that time, the type of building and the benefits desired by the building owner are determined. Allocation of human resources, time planning, and how to control the process.

In the implementation of construction projects, the project's duration is often accelerated due to certain conditions; for example, the project owner may want the project to be completed earlier than the original plan, or the owner will give a bonus if the project is completed earlier than planned. Even with an ongoing project, and it turns out that progress is late, it is necessary to restore the original plan's progress. For this need, it is necessary to accelerate the time of each activity to achieve the progress planned at the beginning of the plan. Efforts to speed up the time of each activity can be made, among others, by increasing the number of workers or increasing the number of hours or hours of overtime.

Delays can result in changes in various components of project work, including in terms of planned project costs. One of the stages of work contained in the construction process is structural work. Structural work has a very vital role in the construction process because almost all the main components of structural work are located on the critical path in the planned project schedule. Therefore, if there is a delay in one of the structural works located on the critical path, it will cause delays in the next work if no countermeasures are taken.

Construction performance results in the United States reflect these observations, with 33% of construction projects over budget and 42.00% completed late (Post, 1998). The quality of industry performance has not improved significantly in the 21st century, with one source reporting that 29% of projects were completed late and 26.00% over budget (Shortages, 2005), and another source reported that 33% of projects were completed over budget and 50% late (Georgy et al. 2005). Overruns on large projects have exceeded the estimated budget or schedule of 40.00-200.00% (Condon and Hartman 2004).

Herman Gregory Ballard, in his 2000 dissertation entitled The Last Planner System of Production Control. This research aims to determine whether LPS can increase the reliability of work plans with PPC above 70.00%. The study was conducted on several construction projects. This study concluded that LPS could increase planning reliability above 70.00%.

Alok Patel, in his 2011 thesis entitled The Last Planner System for Reliable Project Delivery. The research aims to monitor and evaluate improvements or changes to construction projects' planning and control systems using LPS in a case study, namely the UTA College Park development project. This study concludes that LPS implementation can improve the ongoing planning process during project implementation.

Following the explanation of the background research above, it is important to do a study that affects the performance of contractors on building projects residential high-rise is causing delays in a project in terms of time and costs by using the application method of the Last Planner System (LPS) and the method of Least Cost Analysis with previous application methods used in planning.

This research was conducted on the T-36 high-rise residential building project belonging to the High Court; with the aim of (a) assessing the understanding of project workers related to the implementation of the method Last Planner System (LPS), Least Cost Analysis (LCA) and process control on the project; (b) examine how to apply Least Cost Analysis (LCA) to high-rise residential building projects in order to produce project completion with time and cost according to the schedule and budget; (c) knowing the effect of LPS & LCA method analysis on the control process in the completion of high-rise residential building projects; and (d) test whether project workers' understanding of LPS & LCA can synergize well in the control process in the completion of high-rise residential building projects.

Research Method

Respondents in this study were the T-36 residential building project workers belonging to the High Court, such as project manager, site manager, head engineering, site engineer, and supervisor with more than 5 years experience and minimum D3 education. Sixty respondents were chosen to provide their perspectives on their understanding of LPS, LCA, and the critical nature of control processes in all aspects of the project. All variables are latent variables so that their respective measurement indicators are developed. Respondents' answer choice scores used a Likert scale, where the conversions were: 1 = strongly disagree, 2 = disagree, 3 = undecided, 4 = agree, and 5 = strongly agree.

To address objective 1, the respondents' responses to the questionnaire's statement questions are input using a descriptive analysis approach.

The measuring indicators created to assess project workers' varying perceptions of the method Last Planner System (LPS) as a basic plan in high-rise residential building projects (X_1) are as follows:

[a]. Detailed planning of each project activity (X_{11}) from the aspect of time and cost.
[b]. There is good coordination between management and project workers (X_{12}).
[c]. IDIC covers possible problems and SOPs for their resolution (X_{13}).
[d]. There is an opportunity for negotiation between project workers and management (X_{14}).
[e]. There is a commitment from all parties involved in the project to complete the project on schedule (X_{15}).

The measurement indicators developed for the variable understanding of project workers on the importance of the method Least Cost Analysis (LCA) as an operational, technical plan in high-rise residential building projects (X_2) are:

[a]. The detailed schedule of each project activity (X_{21}) is related to the duration of completion of each activity in the project.
[b]. There is a sequence of all activities and the relationship between activities (X_{22}).
[c]. There is an opportunity to accelerate the completion of activities to shorten the overall project completion (X_{23}).
[d]. There is a process of supervision in each activity (X_{24}).
[e]. There is a commitment from all parties involved in the project to complete the project on schedule (X_{25}).

The measurement indicators developed for the variable understanding of project workers on the importance of controlling each job in the project on a high-rise residential building project (Y) are:

[a]. There is a scheduled supervision activity for each activity in the project (Y_1).
[b]. There is an evaluation of the work results scheduled for each activity in the project (Y_2).
[c]. There is good coordination with material logistics management (Y_3).
[d]. There is good coordination with the logistics management of human resources in the project (Y_4).
[e]. There is good coordination with heavy equipment logistics management (Y_5).

To address objective 2, the LCA method is used to develop a length and cost plan for each task in the project, as well as an examination of the potential of expediting work on the critical route.

Multiple linear regression analysis techniques were used to address objective 3. Multiple linear regression analysis with latent variables is the technique for achieving objective 3. The following are the regression models that have been developed:

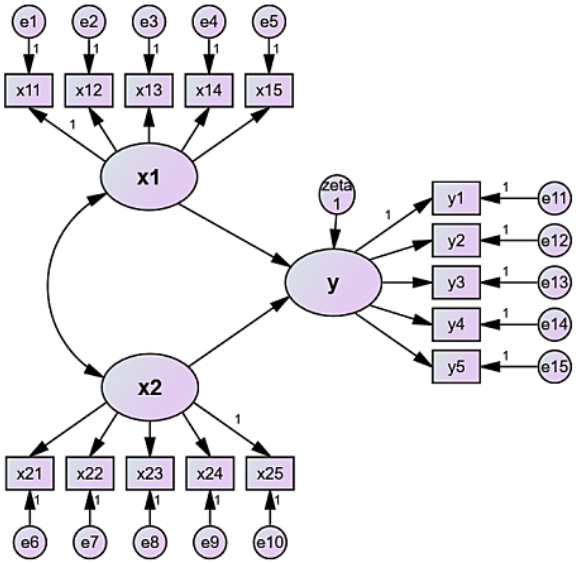

Figure 1. Regression Model-1

To address objective 4, a multiple linear regression analysis strategies involving exogenous variables is adopted, as depicted in Figure 2:

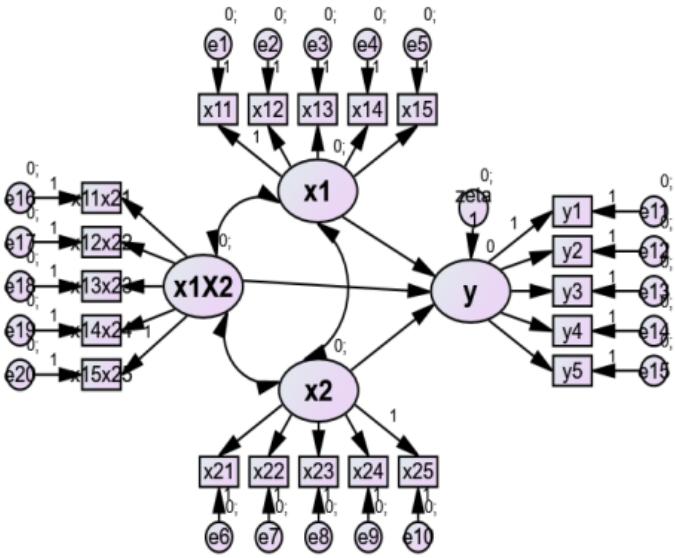

Figure2. Regression Model-2

Research Result

Results of Descriptive Statistical Analysis

Project workers understand the importance of LPS as a basic project planning, understand the importance of LCA as project operational, technical planning, and understand the importance of process control in every job in the project. Results of descriptive analysis.

Table 1. Descriptive Statistics X_1, X_2, and Y.

Indicator	Mean	Mode	Min	Max
X_{11}	3,57	3	2	5
X_{12}	3,45	3	2	5
X_{13}	3,55	3	2	5
X_{14}	3,52	3	2	5
X_{15}	3,47	3	2	5
X_{21}	3,55	3	2	5
X_{22}	3,35	3	2	5
X_{23}	3,35	3	2	5
X_{24}	3,42	3	2	5
X_{25}	3,33	3	2	5
Y_1	3,47	3	2	5
Y_2	3,37	3	2	5
Y_3	3,35	3	2	5
Y_4	3,43	3	2	5
Y_5	3,23	3	2	5

Source: Data, processed.

In general, most project worker respondents believed that the management's LPS was appropriate and nearly perfect as a basic plan for project completion. Most project worker respondents believed that the management's LCA was adequate or near to adequate as a guideline for carrying out each task during the project's completion. Most project worker respondents believe that the management's control procedure is adequate and close to serving as a fundamental guideline for evaluating work outputs at each level of activity and overall during project completion.

The results of the descriptive analysis of respondents' perceptions of project workers indicate that the majority of project workers believe that: (a) IDIC as a basic plan is "adequate" and "close to good"; (b) LCA as operational, technical planning related to time and cost is "adequate" and "near good"; and (c) the control process is "adequate" and "close to good. However, this study cannot explain the relationship's pattern or the influence of the three dimensions of knowing.

LCA Analysis Results

Before acceleration, the project takes 109 weeks to complete:

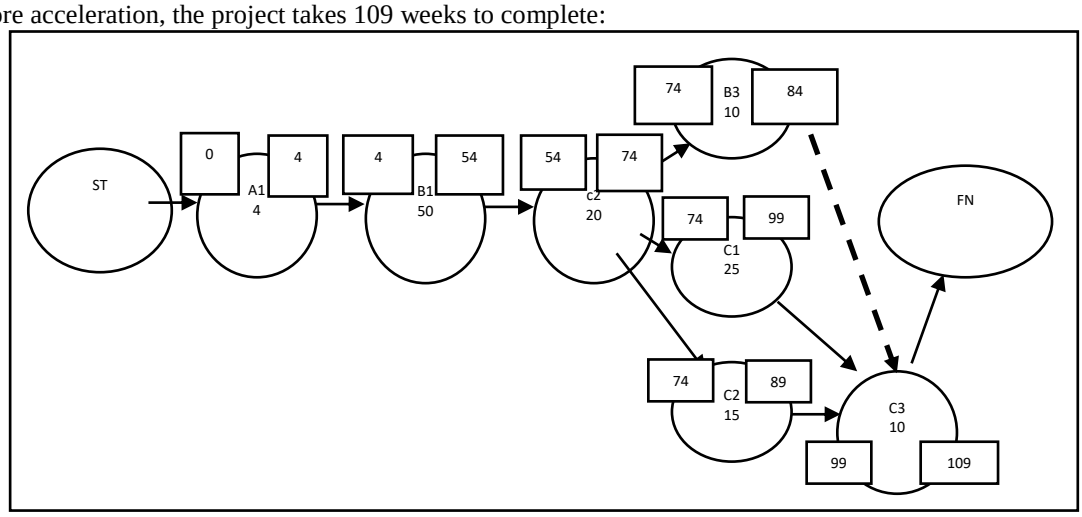

Figure3. Networking Before Acceleration.

After acceleration, the project takes 102 weeks to complete:

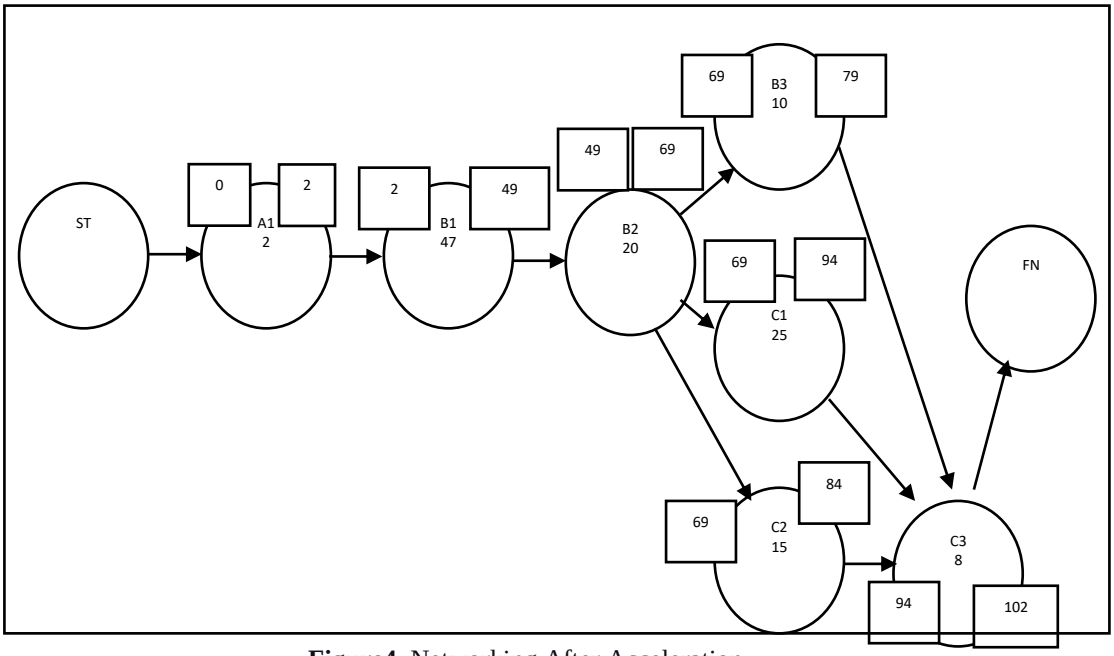

Figure4. Networking After Acceleration.

This acceleration results in a rise of Rp. 135,339,583.88 in indirect costs. This becomes a factor in determining whether or not to accelerate through a comparison of the savings in indirect costs associated with time acceleration

Results of Regression Analysis

The initial regression model included exogenous variables X_1 and X_2, as well as endogenous variables Y. The resulting regression function is as follows: $\mathbf{Y = 0.107\ X_1 + 0.092\ X_2 + e_1}$, indicating that the effect of X_1 and X_2 on Y is statistically significant. Additionally, a regression model incorporating the interaction of the two exogenous variables, $X_1$and X_2, was built. The resulting regression function is: $\mathbf{Y = 0.349\ X_1 + 0.358\ X_2 + 0.071\ X_1X_2 + e_2}$, indicating that the three exogenous variables have a significant positive effect on Y. The effect of $X_1$and X_2 was increased when compared to the first regression model; this indicates that X_1 and X_2 had a synergistic effect on Y. This is consistent with ASCE (2015) Survey of Last Planner System Users' Motivations, Benefits, and Implementation Challenges and ASCE (2017) research Using Last Planner and a Risk Assessment Matrix to Reduce Variation in Mechanical Related Construction Tasks.

Conclusion

From the research objectives, and the results of the analysis, the following conclusions can be drawn:

1. Understanding project workers related to implementing the method Last Planner System (LPS), Least Cost Analysis (LCA)**,** and process control in high-rise residential building projects.In general, most project worker respondents considered that the LPS made by the management was adequate and close to good as a basic plan for project completion. Most of the project worker respondents also considered that the LCA made by the management was categorized as adequate and close to good as a basic guideline for carrying out every activity in project completion. Most of the project worker respondents consider that the control process made by the management is adequate and close to both as a basic guideline for evaluating work results both at each stage of activity and as a whole in project completion.
2. Apply Least Cost Analysis (LCA) on high-rise residential building projects to produce project completion with time and cost according to the schedule and budget.The residential building project, which was originally going to take 109 weeks to complete, could be shortened to 102 weeks with acceleration efforts. The decision to accelerate this needs to be considered through a comparison of the total cost of the acceleration with the indirect cost savings that can be made due to the shortening of the completion time of 7 weeks.
3. The effect of LPS & LCA method analysis on the control process in the completion of high-rise residential building projects.Partially, the understanding of project workers related to the implementation of the method Last Planner System (LPS), and understanding of project workers related to Least Cost

Analysis (LCA), proved to be significantly positive on the understanding of project workers about the importance of process control in high-rise residential building projects.

4. Understanding of project workers regarding LPS & LCA can synergize well to increase the understanding of project workers on the importance of the control process in the completion of high-rise residential building projects.

SUGGESTION

Based on the findings in the study, several suggestions can be made so that the completion of the Kejati residential building project is following the time and funding schedule.

1. LCA implementation, especially for the acceleration of work, can be carried out with more detailed sub-work details of each job. Because of this, it is still possible to accelerate the acceleration of sub-jobs which will have a positive effect on the total acceleration of work.
2. Considering the synergistic effect of project workers' understanding of the importance of LPS as a basic plan with project workers' understanding of the importance of LCA as operational, technical planning; it is necessary to involve more intense project workers in the preparation of LPS and LCA, according to their respective capacities, abilities, and responsibilities.
3. LCA dynamics need to be carried out considering the factors that affect it: the cost and time of completion and the possibility of scarcity and fluctuations in input prices for each job given the uncertain future(*conditions risk conditions*).

References

[1]. Arditi,D.,Sikangwan, P., and Tokdemir, O. (2002). "*Scheduling system for high-rise building construction*." Constr. Manage. Econom., 204,

[2]. Dipohusodo, Istimawan. (1996)."ManajemenProyek&Konstruksi – Jilid I".Kanisius: Yogyakarta.

[3]. Ervianto, WulframI.(2002)."ManajemenProyekKonstruksi". Andi: Yogyakarta.

[4]. Hegazy,T and Wassef, N.(2001)."*Cost optimization in projects with repetitive nonserial activities*." J. Constr. Eng. Manager., 1273, 183– 191.

[5]. Hegazy, Tareq and Ehab Kamarah. (2008). "*Efficient Repetitive Scheduling for High-Rise Construction".*ASCE Journal.

[6]. Hinze, J.W. (2008), "*Construction Planning and Scheduling*", Third Edition, Pearson Education Inc, New Jersey.

[7]. Kavanagh, D.P.(1985), "*SIREN: A Repetitive Construction Simulation Model*", J. Constr. Eng. and Mgmt., ASCE, 111(3), 308-323.

[8]. Laksito, Budi (2005),"Studi Komparatif Penjadwalan Proyek Konstruksi Repetitif Menggunakan Metode Penjadwalan Berulang (RSM) dan Metode Diagram Preseden (PDM)", Media Teknik Sipil, 85-91.

[9]. Laramee, J.(1983)."*A planning and scheduling system for high-rise building construction*." MS thesis, Center for Building Studies, Concordia Univ., Montreal, Canada.

[10]. Soeharto, I. (1999)."ManajemenProyek (Dari KonseptualSampaiOperasional)". Jakarta: Erlangga.

[11]. Thabet,W, and Beliveau, Y.(1997). "*SCaRC: Space-constrained resource-constrained scheduling system*." J. Comput. Civ. Eng., 111, 48–59.

[12]. Uher, T.E. (1996)."*Programming and Scheduling Techniques. Australia: Construction Project Management and Economics Unit*", School of Building, University of NSW.

[13]. Wiranata,AAdkk.(2009)."PenggunaanMetodePenjadwalanBerulang (*Repetitive Scheduling Method*) pada PengerjaanProyekPerumahan".JurnalIlmiah Teknik Sipil Vol. 13, No. 2, Juli 2009.

[14]. Yang, T and Ioannou, P. (2004). "*Scheduling system with focus on practical concerns in repetitive projects*." Constr. Manage. Econom., 22, 619–630.

[15]. Wang, et al (2018), *Causes of delays in the construction phase of Chinese building projects, Engineering, Construction and Architectural Management*, Emerald, https://doi.org/10.1108/ECAM-10-2016-0227

[16]. Zidane (2018), *The top 10 universal delay factors in construction projects, International Journal of Managing Projects in Business*, Emerald, https://doi.org/10.1108/IJMPB-05-2017-0052.

[17]. Nihal et al (2015), *Decision-Making Model for Selecting the Optimum Method of Delay Analysis in Construction Projects*, ASCE, Journal of Management in Engineering, DOI: 10.1061/(ASCE)ME.1943-5479.0000441.

[18]. Marion M. Russell1; Min Liu2; Gregory Howell, M.ASCE3; and Simon M. Hsiang4, *Case Studies of the Allocation and Reduction of Time Buffer through Use of the Last Planner System*, ASCE, Journal of Management in Engineering, DOI : 10.1061/(ASCE)CO.1943-7862.0000900.